Slovenský metrologický ústav
Karloveská 63, 841 04 Bratislava,
Slovenská republika

SNAS
Reg. No. 101/P-035

CERTIFIKAT EÚ SKÚSKY TYPU

EU – type examination certificate

Číslo dokumentu: **SK 09-MI001-SMU007** **Revízia 8**
Document number: Revízia 8 nahrádza certifikát zo dňa 29. apríl 2022 *Revision 8*
Revision 8 replaces the certificate issued by April 29, 2022

V súlade s:
In accordance with:
prílohou č. 2, Modul B nariadenia vlády Slovenskej republiky č. 145/2016 Z. z. o sprístupňovaní meradiel na trhu v znení nariadenia vlády SR č. 328/2019 Z. z., ktorým sa preberá smernica Európskeho parlamentu a Rady 2014/32/EU o harmonizácii právnych predpisov členských štátov týkajúcich sa sprístupnenia meradiel na trhu
Annex II, Module B to Government Ordinance of the Slovak Republic No. 145/2016 Coll. Relating to the making available on the market of measuring instruments as amended by Government Ordinance of the Slovak Republic No. 328/2019 Coll., which implemented the Directive 2014/32/EU of the European Parliament and of the Council on the harmonisation of the laws of the Member States relating to the making available on the market of measuring instruments

Žiadateľ/Výrobca:
Issued to (Manufacturer):
Apator PoWoGaz S.A.
Jaryszki 1c, 62-023 Żerniki, Poland

Druh meradla:
Type of instrument:
Vodomer (MI-001)
Water meter (MI-001)

Označenie typu:
Type designation:
JS (pre teplotnú triedu T30 a T50)
JS (for temperature class T30 and T50)

Základné požiadavky:
Essential requirements:
príloha č. 1 a príloha č. 3 Vodomery (MI-001) k nariadeniu vlády SR č. 145/2016 Z. z. v znení nariadenia vlády SR č. 328/2019 Z. z.
Annex No. 1 and Annex No. III Water meters (MI-001) to Government Ordinance of the Slovak Republic No. 145/2016 Coll. as amended by Government Ordinance of the Slovak Republic No. 328/2019 Coll.

Platnosť do:
Valid until:
3. september 2029
September 3, 2029

Notifikovaná osoba:
Notified body:
Slovenský metrologický ústav **1781**
Slovak Institute of Metrology *1781*

Dátum vydania:
Date of issue:
23. marec 2026
March 23, 2026

Základné charakteristiky, popis meradla a podmienky schválenia sú uvedené v prílohe, ktorá je súčasťou tohto certifikátu. Certifikát vrátane prílohy má spolu 12 strán.
Essential characteristics, instrument description and approval conditions are set out in the appendix hereto, which forms the part of the certificate. The certificate including the appendix contains 12 pages.



Ing. Viliam Mazúr
zástupca notifikovanej osoby
representative of notified body

Poznámka: Tento certifikát EÚ skúšky typu môže byť rozmnožovaný len celý a nezmenený. Bez podpisu a odtlačku pečiatky je neplatný.
Note: This EU-type examination certificate shall not be reproduced except in full. Certificates without signature and stamp are not valid.

1 Instructions and standards used within assessment

1.1 Generally binding instructions

Meter type was examined in terms of request for given type provisions Government Ordinance of the Slovak Republic No. 145/2016 Coll. relating to the making available on the market of measuring instruments as amended by Government Ordinance of the Slovak Republic No. 328/2019 Coll., which implemented the Directive 2014/32/EU of the European Parliament and of the Council of 26 February 2014 on the harmonisation of the laws of the Member States relating to the making available on the market of measuring instruments as later amended (next Government Ordinance).

Requirements are set out in Annex No. 1 and Annex No. 3 Water Meters (MI-001) to Government Ordinance of SR No. 145/2016 Coll. as amended by Government Ordinance of the Slovak Republic No. 328/2019 Coll.

1.2 Technical specification used:

OIML R 49-1:2013	Water meters intended for the metering of cold potable water and hot water. Part 1: Metrological and technical requirements
OIML R 49-2:2013	Water meters intended for the metering of cold potable water and hot water. Part 2: Test methods
OIML R 49-3:2013	Water meters intended for the metering of cold potable water and hot water. Part 3: Test report format
EN ISO 4064-1:2017	Water meters for cold potable water and hot water. Part 1: Metrological and technical requirements
EN ISO 4064-2:2017	Water meters for cold potable water and hot water. Part 2: Test methods
EN ISO 4064-3:2014	Water meters for cold potable water and hot water. Part 3: Test report format
EN ISO 4064-5:2017	Water meters for cold potable water and hot water. Part 5: Installation requirements

2 Type marking

Water meter: **JS**

Meter is made in following subgroups:

Type of meter	Temperature class	Class	Nominal Diameter
JS	T30, T50	M1[1)], B[2)]	DN15, DN20

SLOVENSKÝ METROLOGICKÝ ÚSTAV / SLOVAK INSTITUTE OF METROLOGY
NB 1781
-1-

[1] according to Government Ordinance of the Slovak Republic, Annex No. 1

[2] according to EN ISO 4064-1:2017 and OIML R 49-2:2013

3 Description of measuring instrument

Meter name: Vane-wheel single-jet water meter

Type marking: JS

Description of operating principle instrument design:

Vane-wheel single-jet water meters JS with permanent flow rates of 1,6 m^3/h, 2,5 m^3/h and 4 m^3/h have been designed to measure actual volume of clean cold potable water flowing in a completely filled up closed pipeline. The water meter for cold water is composed of a body, of the measuring mechanism and the counter. Water flowing through a meter sets the vane-wheel in a rotary motion that is transferred by a magnetic clutch to the counting mechanism.

Vane-wheel single-jet water meters JS are composed of two basic assemblies:

1. measuring unit
2. counting mechanism

The body of the water meter is a brass casting (meters could be with composite body) equipped with screwed pipe connectors to enable mounting on a pipeline with the help of fittings and nuts.

Water meters are equipped with units that improve their resistance to external magnetic field. These meters may be additionally marked "SN+".

The counting mechanism has been set so that it can be easily adjusted by rotation to facilitate readout.

Water meters have been equipped with screwed pipe connectors to enable mounting on a pipeline with the help of fittings and nuts.

Water meters have been fitted for mounting on pipelines in horizontal and vertical positions. Accidental occurrence of a reverse flow does not affect metrological characteristics provided for a normal flow.

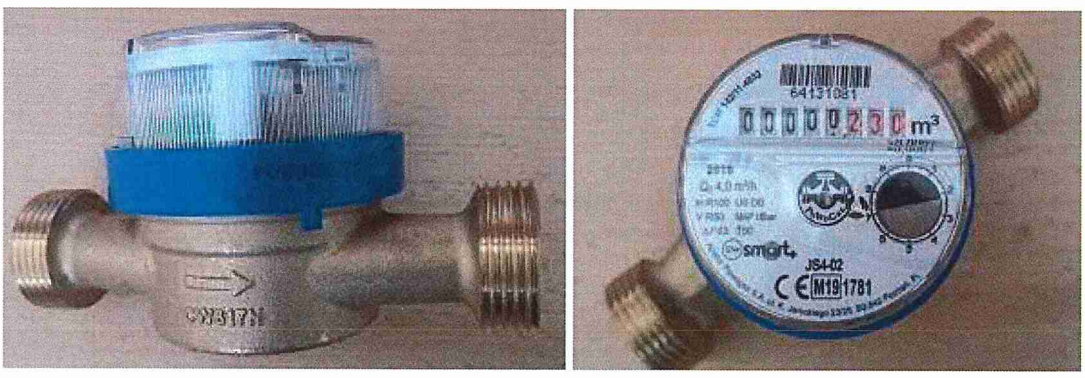

Picture No. 1 Vane-wheel single-jet water meter JS

SLOVENSKÝ METROLOGICKÝ ÚSTAV / SLOVAK INSTITUTE OF METROLOGY
NB 1781
-1-

3.1 Description of subgroups

Marking: **JS**

Sizes: **DN15, DN20**

Due to the designing solutions adopted and application range assumed for water meters JS with permanent flow rates of 1,6 m^3/h, 2,5 m^3/h and 4 m^3/h there were introduced diverse varieties of meters marked with JSX-YY or JSX-NKYY or JSX-NKPYY,

Where: X is the value of permanent flow rate: 1,6 m^3/h, 2,5 m^3/h and 4 m^3/h and YY is a version of the basic design with or without the pulse transmitter.

For example:

- JS 2,5 – version with a 5-roller counter,
- JS 2,5-01 – version with a plastic body,
- JS 2,5-02 – version with an 8-roller counter,
- JS 2,5-03 – version with an 8-roller counter and plastic body,
- JS 2,5-04 – version with a counter adapted for fitting a radio or remote reading transmission device which was not part of this certification,
- JS 2,5-NK – version with a reed contact pulse transmitter,
- JS 2,5-NKP – version with an output for a reed contact pulse transmitter,
- JS 2,5-NK-01 – version with a reed contact pulse transmitter and a plastic body,
- JS 2,5-NKP-01- version adapted to fit a reed contact pulse transmitter and with a plastic body.

3.2 Measuring insert

The main elements of the measuring unit are the following:

- a body with a strainer set in the inlet channel and a basic axle pressed into the body bottom without any additional swelling plate in the body bottom or with an swelling plate fixed to the body bottom,
- a vane-wheel,
- a packing plate.

The vane-wheel is borne on a basic axle and in a bearing sleeve mounted on the packing plate. There is a magnet of a magnetic clutch on the vane-wheel. The packing plate is fitted with an adjusting ribs angled to water flow, which allows meter adjustment.

3.3 Indicating device

The capacity of the counter is 99 999 m^3 and resolution of the reading is 0,05 dm^3.

The counting mechanism includes a rear clutch, gears and a register. The register may consist of four pointers and five drum roller or one pointer and eight-drum roller. A transparent casing facilitates readout of meter indications. A special pin in the counter has been provided to prevent undesirable casing deflection thereby indicating unauthorised manipulation. On the central axle of the counting mechanism on which the magnet of the magnetic clutch has been fixed there is a small unit disk that performs a function of a vane-wheel rotation indicator. The unit disk is also used in the process of electronic testing of meters.

The counter design does not allow for resetting of meter indications.



Counter pointers rotate clockwise. Indicated digital values increase as the drums with digits marked on them move upwards. An indication increase by one digit is complete when a digit in a lower decade changes from 9 to 0. In a decade of the lowest values digital indications change continuously. Black digits marked on digital drums indicate cubic meters or their multiples whereas red digits or pointers indicate submultiples of cubic meters.

The pointers move round scales marked with proper multipliers and placed on an indicating dial.

The water meter in the version with a reed contact pulse transmitter – NK and NKP varieties – in the counting mechanism, on one of the pointers a magnet is fixed to short-circuit reed relay contacts and the counter casing is equipped with a socket to connect the transmitter assembly. The counter casing with the transmitter is protected with a magnetic shield.

The water meter in the version adapted for fitting of the radio or remote meter reading devices on one of the pointers a magnet has been fixed or reflective pointers to short-circuit reed relay contacts and the counter casing has been suited to fit a radio device for wireless reading or a remote meter reading device.

Connection between the measuring unit and counter gear is provided by both a guarding and a fixing ring or by a fixing ring alone. The guarding ring may be equipped with a cover. On endings of the fixing rings seal holes is provided.

3.4 Principle of operation

The water meter operates on the principle of a water speed sensor by impeller wheel. The operating speed of the wheel is proportionated to the speed of overflowing water. The operating speed is proportionated to water delivered quantity. The water meter is dedicated to measure the flow and the delivered cold-water quantity.

3.5 Technical documentation

A number of drawings of technical documentation is listed in the following list:

0000-003521	9007-260700	9467-000000	9710-000000	9612-000000
0000-003737	9007-270000	9468-000000	9710-010000	9617-000000
0000-004481	9007-340000	9469-000000	9710-010100	9622-000000
0000-004482	9007-340700	9470-000000	9711-000000	9666-000000
9004-310000	9007-480000	9527-010200	9711-010000	9667-000000
9004-310700	9007-490000	9527-011300	9711-010100	9668-000000
9004-320000	9007-510000	9529-011000	9706-000000	9669-000000
9004-320700	9007-510700	9529-060000	JS(M) Materials	9726-000000
9004-510000	9007-510703	9537-000000	JS(M) Sealing	9001-250000/500
9004-950000	9007-510710	9550-000000	9526-000000	9001-270000/500
9004-950700	9007-840000	9551-000000	9527-000000	9001-280000/500
9007-010000	9007-840700	9551-040000	9528-000000	9004-020000/500
9007-010700	9007-990000	9552-000000	9529-000000	9004-022700
9007-050000	9007-990700	9553-000000	9527-010000	9004-600000/500
9007-050700	9050-012000	9554-000000	9527-010102	9004-790000/500
9007-250000	9443-000000	9576-000000	9527-010700	0000-014806
9007-250700	9450-010400	9578-000000	9527-170000	9004-022700
9007-260000	9465-000000	9579-000000	9602-000000	

SLOVENSKÝ METROLOGICKÝ ÚSTAV / SLOVAK INSTITUTE OF METROLOGY
NB 1781
SMU
-1-

All drawings, schemes and technical documentations used during the conformity assessment are saved in documents No. NO-061/08, No. NO-088/09, NO-293/15, NO-400/18, NO-499/21, NO-532/22, NO-541/22 and NO-691/26.

4 Basic technical characteristics

Type marking		**JS**	
Nominal diameter DN	mm	15	20
Indicating range	m^3	10^5	
Resolution of the reading	m^3	0,00005	
Water pressure class	-	MAP16	
Working pressure range	bar	from 0,3 to 16	
Pressure loss class	-	Δp 63	
Temperature class	-	T30, T50	
Flow profile sensitivity classes	-	U0, D0	
Position	-	Horizontal with indicating device positioned on top, H↑ Horizontal with indicating device positioned on side, H→ Horizontal with indicating device in any position, H Vertical from bottom to top and from top to bottom V	
Climatic and mechanical environments	-	closed spaces /from 5°C to 55°C/	
Impulse number NK, NKP, YY	dm^3/ imp	0,25; 1; 2,5; 10; 25; 100; 250; 1000	
Information specified by the manufacturer			
Environmental class		B	
Mechanical class		M1	
EUT testing requirements (OIML R 49-2:2024, 8.1.8)			
Category		Turbine water meters	
Case		A	

4.1 Additional technical characteristics

Weight	from 0,25 kg to 0,55 kg
Meters equipped with units that improve their resistance to external magnetic field	additional „SN+“ mark

SLOVENSKÝ METROLOGICKÝ ÚSTAV / SLOVAK INSTITUTE OF METROLOGY
NB 1781
– 1 –

5 Basic metrological characteristics

The maximum permissible error (accuracy class):

± 5 % ($Q_1 \leq Q < Q_2$)

± 2 % ($Q_2 \leq Q \leq Q_4$) for water temperature (from 0,1 to 30) °C

± 3 % ($Q_2 \leq Q \leq Q_4$) for water temperature greater than 30 °C

Temperature class	**T**	**-**	**30; 50**	
Nominal Diameter	**DN**	**mm**	**15**	
Minimum flow rate	Q_1	m^3/h	According to table of flowrates	
Transitional flow rate	Q_2	m^3/h		
Permanent flow rate	Q_3	m^3/h	1,6	2,5
Overload flow rate	Q_4	m^3/h	2	3,125
Measuring range R H↑	Q_3/Q_1	-	80; 100; 160	
Measuring range R V, H→		-	40; 50; 63	
Ratio	Q_2/Q_1	-	1,6	

Temperature class	**T**	**-**	**30; 50**	
Nominal Diameter	**DN**	**mm**	**20**	
Minimum flow rate	Q_1	m^3/h	According to table of flowrates	
Transitional flow rate	Q_2	m^3/h		
Permanent flow rate	Q_3	m^3/h	2,5	4
Overload flow rate	Q_4	m^3/h	3,125	5
Measuring range R H↑	Q_3/Q_1	-	80; 100; 160	
Measuring range R V, H→		-	40; 50; 63	
Ratio	Q_2/Q_1	-	1,6	

Table of flowrates								
Temperature class	**T**	**-**	**30; 50**					
Diameter	**DN**	**mm**	**15**					
Minimum flow rate	Q_1	m^3/h	0,02	0,016	0,01	0,03125	0,025	0,0156
Transitional flow rate	Q_2	m^3/h	0,032	0,0256	0,016	0,05	0,04	0,025
Permanent flow rate	Q_3	m^3/h	1,6	1,6	1,6	2,5	2,5	2,5
Overload flow rate	Q_4	m^3/h	2	2	2	3,125	3,125	3,125
Measuring range R	Q_3/Q_1	-	80	100	160	80	100	160
Ratio	Q_2/Q_1	-	1,6					



Table of flowrates								
Temperature class	**T**	**-**	**30; 50**					
Diameter	**DN**	**mm**	**15**					
Minimum flow rate	Q_1	m^3/h	0,04	0,032	0,0254	0,0625	0,05	0,0397
Transitional flow rate	Q_2	m^3/h	0,064	0,0512	0,0406	0,10	0,08	0,0635
Permanent flow rate	Q_3	m^3/h	1,6	1,6	1,6	2,5	2,5	2,5
Overload flow rate	Q_4	m^3/h	2	2	2	3,125	3,125	3,125
Measuring range R	Q_3/Q_1	-	40	50	63	40	50	63
Ratio	Q_2/Q_1	-	1,6					

Table of flowrates								
Temperature class	**T**	**-**	**30; 50**					
Diameter	**DN**	**mm**	**20**					
Minimum flow rate	Q_1	m^3/h	0,03125	0,025	0,0156	0,05	0,04	0,025
Transitional flow rate	Q_2	m^3/h	0,05	0,04	0,025	0,08	0,064	0,04
Permanent flow rate	Q_3	m^3/h	2,5	2,5	2,5	4	4	4
Overload flow rate	Q_4	m^3/h	3,125	3,125	3,125	5	5	5
Measuring range R	Q_3/Q_1	-	80	100	160	80	100	160
Ratio	Q_2/Q_1	-	1,6					

Table of flowrates								
Temperature class	**T**	**-**	**30; 50**					
Diameter	**DN**	**mm**	**20**					
Minimum flow rate	Q_1	m^3/h	0,0625	0,05	0,0397	0,10	0,08	0,0635
Transitional flow rate	Q_2	m^3/h	0,10	0,08	0,0635	0,16	0,128	0,1016
Permanent flow rate	Q_3	m^3/h	2,5	2,5	2,5	4	4	4
Overload flow rate	Q_4	m^3/h	3,125	3,125	3,125	5	5	5
Measuring range R	Q_3/Q_1	-	40	50	63	40	50	63
Ratio	Q_2/Q_1	-	1,6					

6 Results of conformity assessment

The results of tests, assessments and evaluations given in the evaluation report No. NO-691/26/B/ER dated March 20, 2026 give sufficient evidence, that the technical design of the measuring instrument – Vane-wheel single-jet water meter type JS is in compliance with the technical requirements of the Slovak Republic Governmental Ordinance No. 145/2016 Coll, relating to the making available on the market of measuring instruments as amended by Government Ordinance of the Slovak Republic No. 328/2019 Coll, Annex No. 1 and Annex No. 3 Water Meters (MI-001) and with the requirements determined in EN ISO 4064-1:2017, respectively OIML R 49-1:2013, which are relevant for this type of meter.

SLOVENSKÝ METROLOGICKÝ ÚSTAV / SLOVAK INSTITUTE OF METROLOGY
NB 1781
SMÚ
– 1 –

7 Data placed on the measuring instrument

On the shroud, the dial of the indicating device or on an identification plate of every water meter or in the product documentation minimum the following data should be marked:

a) Manufacturer's name, registered trade name or registered mark

b) Postal address of manufacturer

c) Measuring instrument type

d) Measuring unit (m^3)

e) Numerical value of Q_3 in m^3/h (Q_3 x,x) and ratio Q_3/Q_1 (Rxxx)

f) Year of production

g) Production serial number

h) Number of EU-type examination certificate and conformity mark

i) The highest admissible pressure if it differs from 1 MPa (MAP xx)

j) Flow direction

k) Letter H↑ (Horizontal with indicating device position on the top) H→ (Horizontal with indicating device position at the side), V (Vertical from bottom to top and from top to bottom)

l) Class of pressure loss if it differs from Δp63 (Δp XX)

m) Flow profile sensitivity classes (Ux Dx)

n) The temperature class where it differs from T30

o) Environmental classification

The environmental classification may be given on a separate datasheet, unambiguously related to the meter by a unique identification, and not on the meter itself.

SLOVENSKÝ METROLOGICKÝ ÚSTAV / SLOVAK INSTITUTE OF METROLOGY
NB 1781
-1-

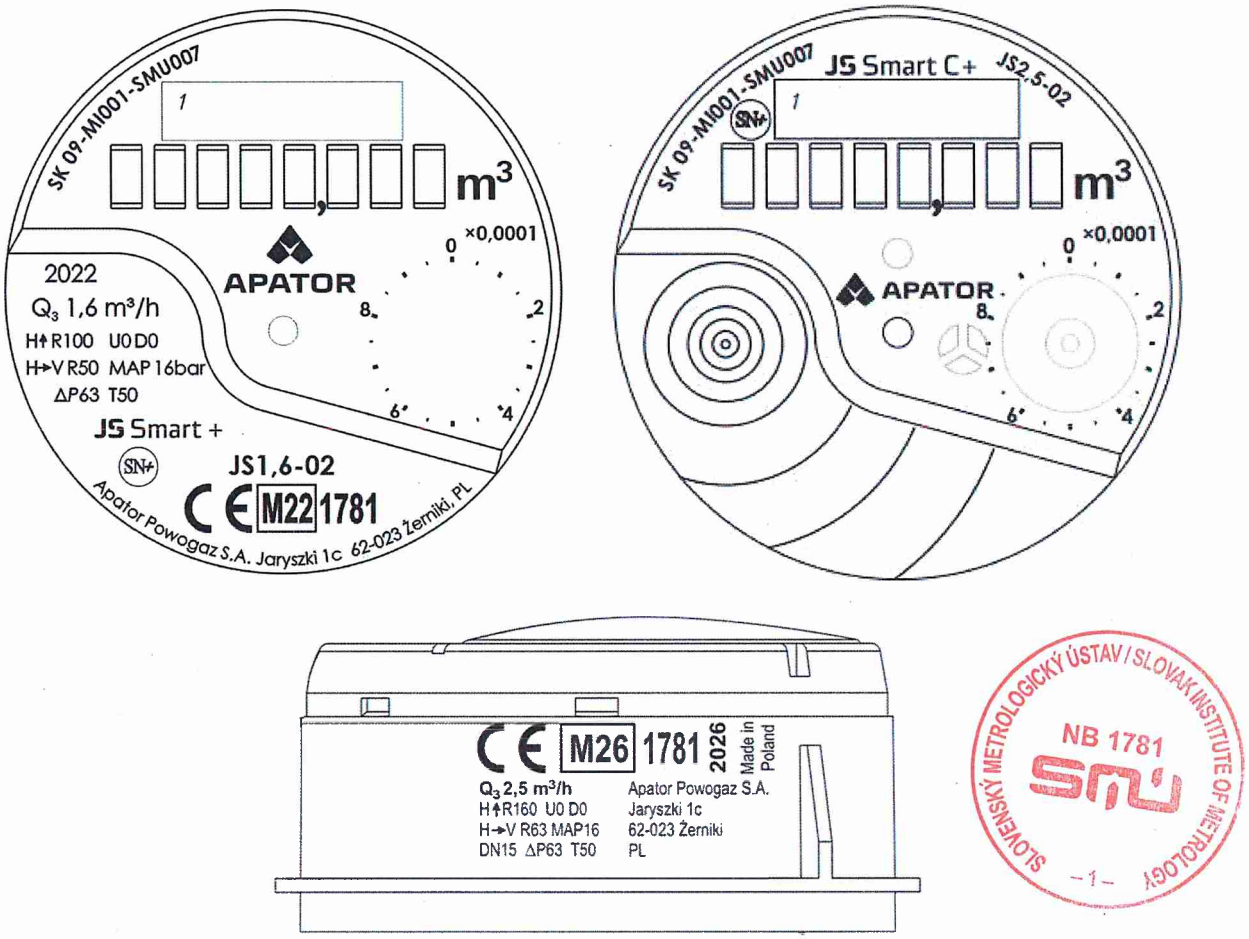

Picture No.2 Example of the dial marking

8 Conditions of conformity assessment of measuring instruments produced with type approval

Vane-wheel single-jet water meter is put onto the market in line with the procedure of conformity assessment according to the Annex No. 2 (Module D or F) of the Governmental ordinance should be in compliance with the technical description by the item 3 of this annex and at test should be in compliance with the requirements determined in OIML R 49-1:2013 and EN ISO 4064-1:2017.

Metrological test is performed by testing equipment which should be in compliance with the requirements determined in EN ISO 4064-2:2017 and water at temperature 20 °C ± 10 °C (for temperature class T30, T50) at the following flowrates:

a) Minimum flowrate $Q_1 \leq Q \leq 1{,}1Q_1$
b) Transitional flowrate $Q_2 \leq Q \leq 1{,}1Q_2$
c) Permanent flowrate $0{,}9Q_3 \leq Q \leq Q_3$

A metrological test may only be performed by a producer, or a notified body respectively in line with the conformity assessment procedure according to the D or F Annexes of the Governmental ordinance respectively.

9 Measures asked for providing measuring instrument integrity

9.1 Identification

Vane-wheel single-jet water meter should be in compliance with the description provided on item 3 of this annex and should be in compliance with the marking specified the item 7 of this annex. The number given to the EU-type examination certificate is put at each piece of the measuring instrument.

Emplacement of the conformity mark is followed by § 15 of the Governmental ordinance.

9.2 Sealing of the measuring instrument

Vane-wheel single-jet water meter shall be before the conformity assessment according to the Annex No. 2 (Module D or F) of the Governmental ordinance sealed by following sealing mark:

Connection of counter shelter and water meter body shall be sealed by seal used for security measures (plastic or leaden seal) (Picture No. 3).

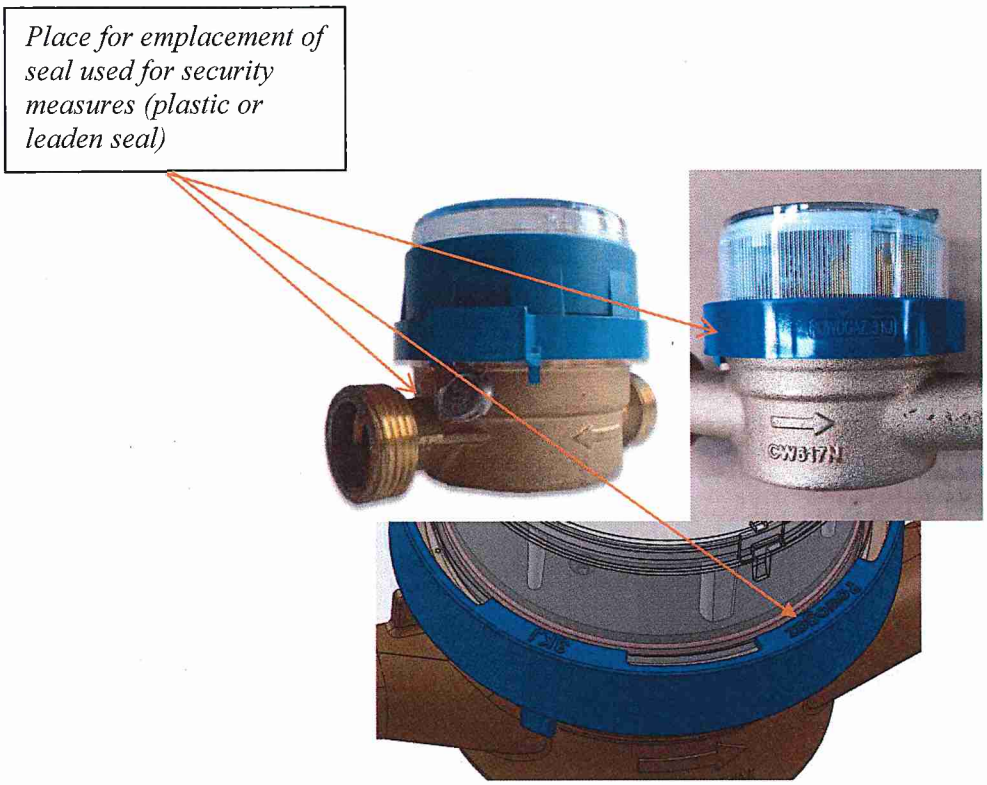

Picture No. 3 Emplacement of the seal used for security measures

SLOVENSKÝ METROLOGICKÝ ÚSTAV / SLOVAK INSTITUTE OF METROLOGY
NB 1781
-1-

10 Requirements for installation, especially conditions of using

10.1 Installation data

Diameter	DN15	DN20	DN15 Composite
G	G3/4, G7/8	G 1	G3/4, G7/8
Construction length [mm] - *L*	80/110/115	115/130	110/115
Counter diameter [mm] - *D*	72	72	72
Weight [kg]	0,35-0,45	0,55	0,25
Height [mm] - *H*	68,5(Smart); 75	68,5(Smart); 75	68,5(Smart); 75
Distance axle from edge [mm] – *h*	17	17	17

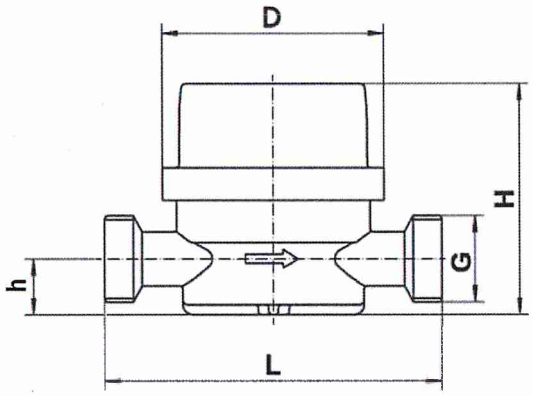

Picture No. 4 Installation dimensions

10.2 Installation requirements

Vane-wheel single-jet water meter should be introduced into the operation by a qualified for such activity worker with a certificate. Water meter is possible to put into use after a construction in line with this annex and in line with a producer instruction by "Instruction of installation and conditions of use of water meters". A measuring instrument should be installed in direction of water flow arrow marked on the meter body.

The indicating device can be oriented in the position indicating in the dial:

- H↑ means flow horizontal and the indicating device position on the top;
- H→ means flow horizontal and the indicating device position on the side;
- H means flow horizontal and the indicating device in any position;
- V means flow vertical from bottom to top or from top to bottom.

10.3 Conditions of use

The measuring instrument should be used within the recommendations of a producer or manufacturer: "Instruction of installation and conditions of use of water meters".

Assessment done by: Maryna Tokarieva

***

SLOVENSKÝ METROLOGICKÝ ÚSTAV / SLOVAK INSTITUTE OF METROLOGY
NB 1781
SMÚ
–1–